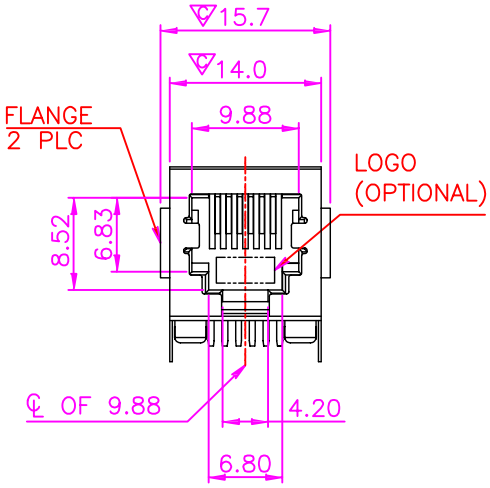

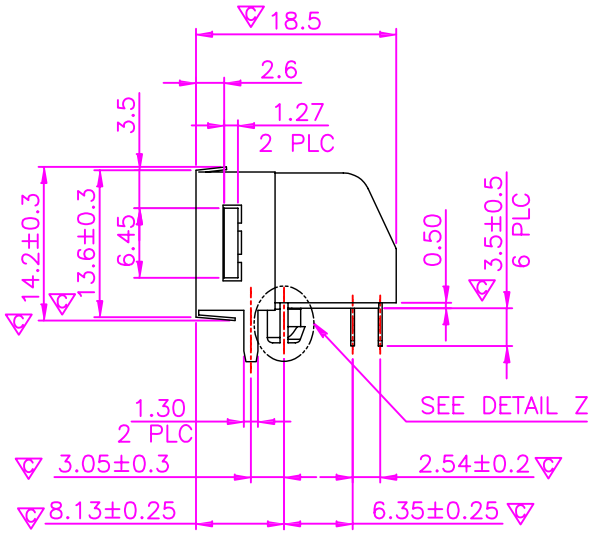

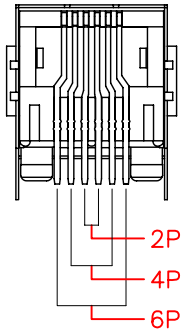

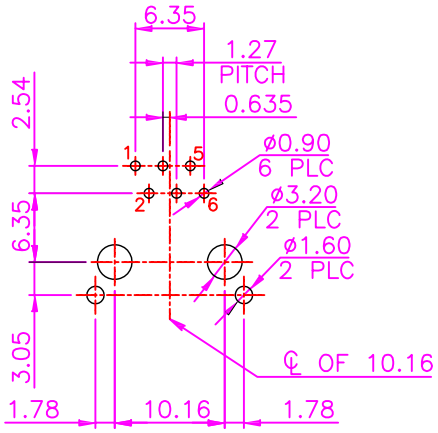

RECOMMENDED PCB LAYOUT

RECOMMENDED PCB THICKNESS: 1.6mm
TOLERANCE: ±0.05 (TOP VIEW)

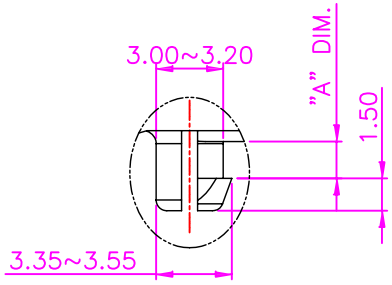

DETAIL Z
SCALE 2:1

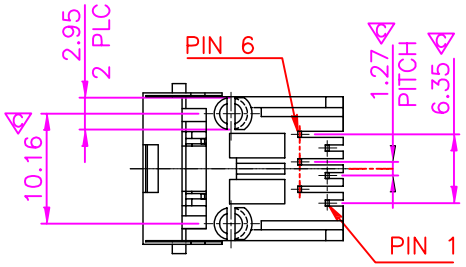

PART NUMBER

CTP-24BA - 6 6 2 0 - 0 4 0

SERIES

POSITION & CONTACT
66 : 6P6C

CONTACT PLATED OPTION
2 = 6u" GOLD

NOTE:

CAVITY CONFIRMS TO FCC RULES AND REGULATIONS PART 68, SUBPART F

1. MATERIAL:
   HOUSING: PBT OR PA46 OR PA9T, WITH GLASS FIBER, UL 94V-0, STANDARD COLOR-BLACK.
   CONTACTS: PHOSPHOR BRONZE.
   SHELL: BRASS.

2. FINISH:
   CONTACTS: GOLD PLATED ON CONTACT AREA, 0.0254μm [1μ"] GOLD PLATED ON SOLDER TAIL, WITH ENTIRE CONTACT UNDERPLATED 1.27μm [50μ"] MIN. NICKEL
   SHELL: 0.508μm [20μ"] MIN. NICKEL PLATED.

3. "▽C" SHOWS QIP INSPECTION POINT.

REV.	DATE	DESCRIPTION
A	0315,2011	RELEASE

Connect-Tech Products Corp.
TEL:+1 510 4400578 www.Connect-Tech-Products.com

TOLERANCES	TITLE	MODULAR JACK SERIES 6 POSITION DIP, WITH SHELL, LOW PROFILE SIDE ENTRY PCB JACK, PANEL GROUND TYPE		
X.X ±0.3 X.XX ±0.2 X.XXX±0.1 Angle ±5°	DRAWED BY	CHECKED BY	APPROVED BY	
	SION	T.Y.H	PING	
20001	UNIT: MM	SCALE: NONE	SIZE: A4	DRAW NO.: D024-BA040 / REV.: A