DCP-2620-JL12-S

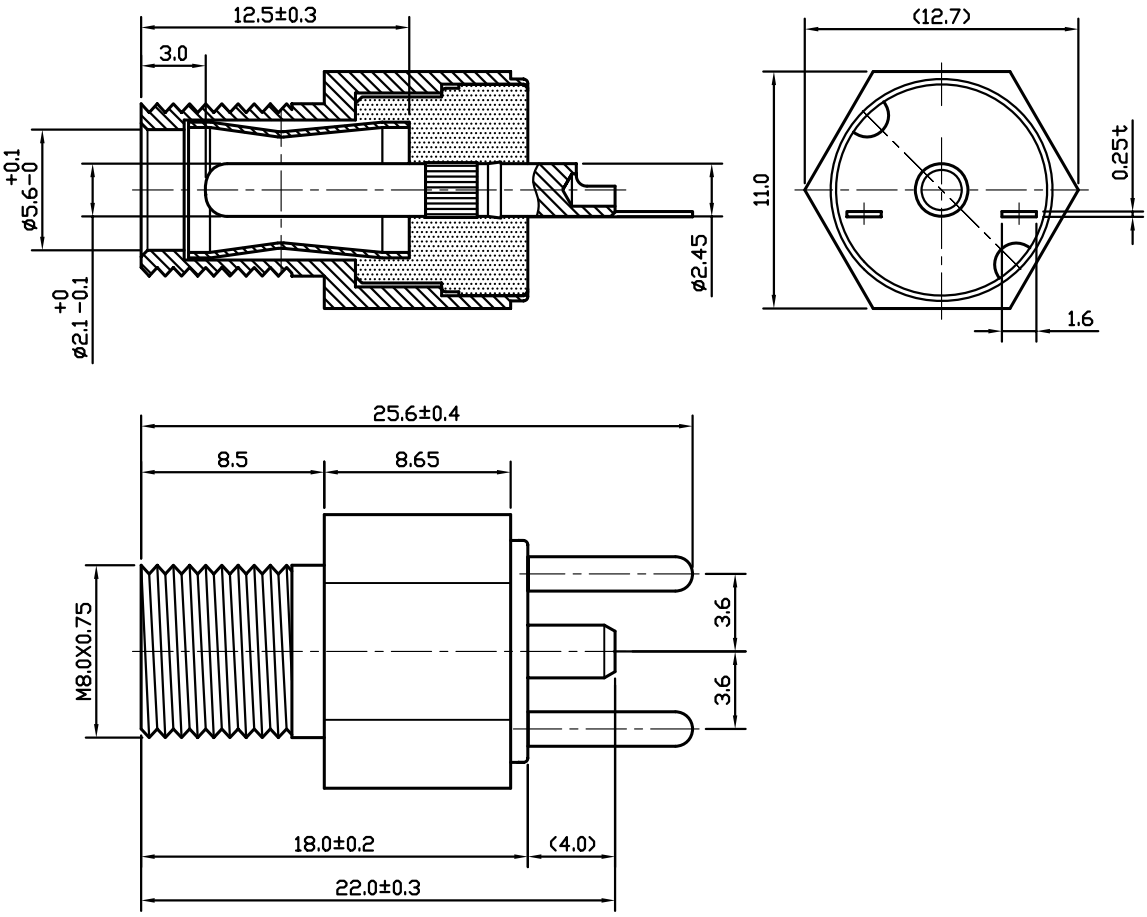

RoHs
1.Dielectric strength:AC 500V/1 minute.
2.Insulation resistance:100MΩ or over.(DC 500V)
3.Contact resistance:30mΩ or less.
4.Extraction force:0.3~3Kg.
5.Rated voltage : 18 V
6.Rated current : 2 A

DIMENSIONS RANGE	TOLERANGE UNLESS SPECIFIED
0.5≤X<1	±0.1
1≤X≤6	±0.15
6<X≤18	±0.2
18<X≤50	±0.3

ITEM	DRAWING NUMBER	NAME	MATERIAL	FINISH	QTY
6	119-135	NUT	BRASS	NI	1
5	179-008	WASHER	IRON	NI	1
4	190-089	DIELECTRIC	PBT	BLACK	1
3	170-236	TERMINAL	PHR BRZ	AG	1
2	119-186	SLEEVE	SUS303	NI	1
1	112-205	PIN	BRASS	AG	1

Phone 1-800-809-2751 Fax 1-510-440-0579
www.connect-tech-products.com • info@connect-tech-products.com
4428 Technology Drive • Fremont, CA 94538, USA • 510-498-8815 • Fax: 510-440-0579